CODE	DESCRIPTION	POS.	GR.
255700A	MAIN CABLE	2	
281802A82	UNIT BASE	3	
255605A70	POWER CABLE	4	
281680A72	DOWN BASE	5	
276209A	COMPRESSOR	6	G0183A
277579A	TERMINAL COVER	6	G0183A
276213A	TEC.COMPRESSOR KLIXON	7	G0183A
276214A	TEC. COMPRESSSOR RELAY	8	G0183A
281589A	SHOCK ABSORBER	9	
276210A	3 POLES TERMINAL BOARD	10	
275930A	MICROSWITCH	11	
594599A	COIL ASSEMBLY	12	
281678A72	CONDENSE TANK	13	
592927A72	FRAME ASSEMBLY WITH FILTER	14	
281806A122	HANDLE	15	
276018A	D.180 AXIAL FAN	16	
276212A	MOTOR	17	
281682A72	MOTOR SUPPORT	18	
281811A122	CONTROL PANEL COVER	19	
592928A	CONTROL PANEL ASSEMBLY	20	
281803A82	SUCTION GRILL	21	
281801A82	BONNET	22	
276506A	THERMOSTAT	23	
281804A69	CONDENSE TANK	23	G0181A
281800A72	TANK BLOCKER	24	G0181A
281145A69	FLOAT	25	G0181A
281689A72	FLOATING HOLDER	26	G0181A

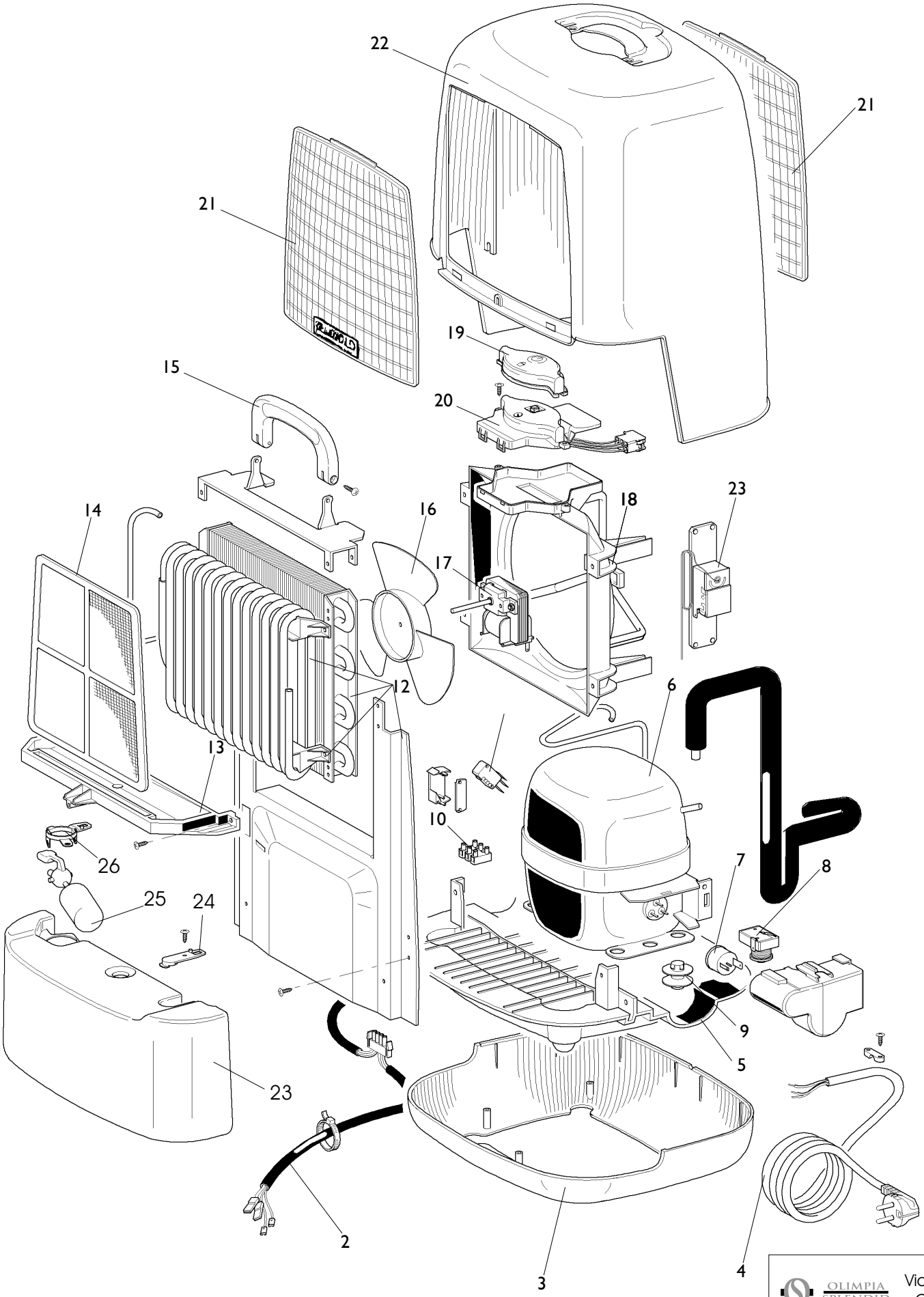

OLIMPIA SPLENDID

Via G. Rossa 1-3
Gualtieri (R.E.)

SECCOREALE
ELETTROMECCANICO

Agg. Settembre 2005 - RIF: 043.01